Design of Chain-Plate Separation and Feeding Device of Fully Automatic Mechanical Press

Jinxiang Yang, Hai Zhang*,Sheng Chen, Dazhao Dong

School of Marine Engineering Equipment , Zhejiang Ocean University, Zhoushan, China

*Corresponding author e-mail: 960745796@zjou.edu.cn

Keywords: Mechanical pressure, Wheel, Fully automatic

Abstract: When processing automobile wheel nuts on a fully automatic mechanical press, in order to solve the problem that the chaotically placed rough workpieces are difficult to be efficiently fed into the fixture in a certain direction and speed, a fully automatic mechanical press chain plate type separating and feeding device is designed. Based on the mechanical principle and design requirements of the device, the chain plate type separating and feeding device is designed with a large chain plate mechanism, a small chain plate mechanism, a feeding mechanism, and a fixed plate mechanism, and can realize automatic separation and feeding of blank workpieces. The three-dimensional design software SolidWorks was used to model the parts and the overall assembly, and the finite element analysis of the load and deformation of the fixed plate mechanism, and then the ordinary carbon steel-4mm was selected as the raw material. Compared with the commonly used vibration feeding device and multi-chain plate single-side feeding device, this device has high efficiency, low noise, strong anti-interference, high practical value, and can stably and reliably convey the blank workpiece in a fixed direction and speed. To the processing station.

1. Introduction

With the improvement of people's living conditions, the demand for automobiles is also expanding. Taking automobile wheel nuts as an example, a car's four tires need to be equipped with a total of 20 wheel nuts. Therefore, relevant statistics show that since 1998, my country's automobiles have The annual output is increasing at a rate of more than 10%[1], and the demand for automobile wheel nuts exceeds 58.318 million pieces. There are two methods of nut processing: cold head forming and hot head forming. The material utilization rate, the mechanical strength of the nut and the production efficiency of the machine are high during cold heading nut processing[2]. The fully automatic mechanical press uses blank workpieces of different shapes and materials to produce standard nut parts. The blank material is mainly short rod cylindrical (diameter 27mm, height 35mm), and Siemens PLC controller is used for system automatic control [3], the use of travel switches and photoelectric sensors as feedback elements ensures the reliability and safety of the entire system. After design optimization, the processes of separating feeding, induction heating, upsetting, pre-forging, final forging, and blanking can be completed in sequence. Compared with the commonly used non-automated and semi-automated mechanical presses, when producing standard nuts, the staff required is 1/5 of the previous, and the time required is about 60% of the previous. At the same time, the defective rate of nuts is also Reduced by 20%.

At present, the vibrating feeding device is commonly used for blank workpiece feeding. Although the blank workpiece can be separated and fed and can follow a certain direction and rhythm, the vibrating feeding device is noisy. In order to feed the messy rough workpieces to the processing position at a certain speed and direction, a silent, high-efficiency fully automatic chain-plate separation and feeding device is designed.

2. . Working Principle

  DOI: 10.25236/iccem.2021.047

The automatic chain-plate separation and feeding device is mainly composed of a small chain plate mechanism, a large chain plate mechanism, a base, a hopper, a large chain plate lifting cylinder, a profile support, a blank workpiece, a guide rail, a feeding cylinder, and a fixed plate, as shown in Figure 1 and in Figure 2.

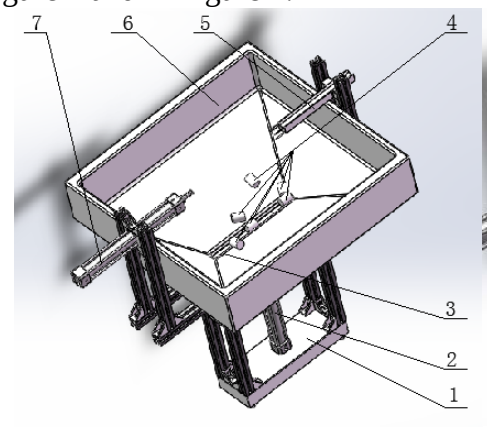

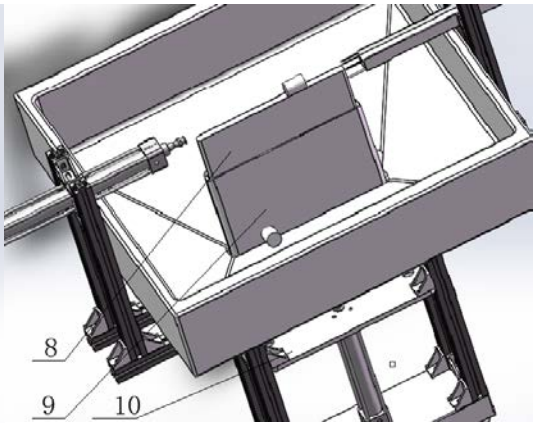

Fig.2 In Plate Type Separation Feeding Device Figure2. Three-Dimensional Model of Chain Plate

1-base, 2-large chain plate lifting cylinder, 3-profile support, 4-blank, 5-rail, 6-hopper, 7-feeding cylinder, 8-small chain plate, 9-large chain plate, 10-Fixed plate

The main principle of the automatic chain-plate separation and feeding device is to place the rough material in the hopper. The shape of the hopper is designed to make the material slide and gather on the side of the chain plate under its own gravity. There is a large chain with a length of 300mm and a width of 28mm Board notch. Driven by the large chain plate cylinder, the large and small chain plates start to move upwards at the same time. There will be grooves on the cross section of the large and small chain plates. As the large and small chain plates begin to move from top to bottom, the large chain plates It will accommodate a material in a specific posture to move upward. The thickness of the large chain plate and the cross-sectional shape of the surface of the large chain plate are designed to ensure that only one material can be carried and separated according to the determined posture during the separation and loading process. When the board moves up to the first limit, the big chain board stops moving up and the small chain board continues to move up until the material reaches the highest point. Under the action of the feeding cylinder, the material is unloaded and introduced into the storage tank through the guide rail, and then passed The air cylinder transports and separates the materials in the storage tank one by one. In the initial position of the large and small chain plates, the height of the chain plates is lower than the minimum height of the hopper to ensure that the materials can fall on the chain plates and the vertical chain plates ensure that the materials will not fall during the ascent.

The common chain plate type separating and feeding device is to place the chain plate mechanism on one side of the hopper [4], and complete the separation of the material by lifting the chain plate several times. In this device, two small air cylinders are installed inside the big chain plate to control the movement of the small chain plate. As the cylinder pushes the small chain plate up to the highest position, the small chain plate also moves the animal material upwards, and then it is driven by the feeding cylinder. The material is sent to the feeding trough to complete the separation and feeding process [5]. This design of designing the small chain plate in the hopper and completing the separation of materials through two liftings not only improves the efficiency of material separation but also makes the device more energy-saving.

3. . Structural Design of Automatic Chain Plate Type Separating and Feeding Device

The automatic chain-plate separating and feeding device is mainly composed of a large chain plate mechanism, a small chain plate mechanism, a feeding mechanism, and a fixed plate mechanism.

3.1 Large Chain Plate Mechanism and Small Chain Plate Mechanism

The large and small chain plate mechanism is mainly composed of large and small chain plates and cylinders. Because the material is of round bar size, the large chain plate is designed as a V-shaped slot with a slot in the middle of the upper surface, as shown in Figure 3. The scattered blank materials are placed in the hopper. In order to increase the probability of materials falling on the large chain plate, the width of the large chain plate should be as large as possible on the premise that only one material can be carried at a time, and the material should move upward with the large chain plate. When the movement reliability is high and the stability is strong, the opening angle of the large chain plate should be appropriately enlarged.

During the normal operation of chain-plate separation and feeding, it may happen that two materials fall on the large chain plate at the same time or the materials stand upright on the large chain plate. For the above two situations that do not meet the feeding requirements, two designs are designed. Two solutions: (1) Add a small chain plate mechanism in the middle of the large chain plate of the device. When the cylinder pushes the small chain plate upwards, one of the two materials will be pushed into the hopper, thus avoiding two When materials are being loaded at the same time; (2) The upper side of the large chain plate is designed to have a certain slope. When there is a height difference on the upper surface, the vertical material of the large chain plate will fall on its own under the action of gravity during the ascent process. Into the hopper. The device chooses a large chain plate with a length of 300mm and a width of 28mm. When the cylinder pushes the small chain plate to rise, if the upward movement fluctuates or is impacted, the original normal materials will fall into the hopper, thereby reducing the efficiency of separating and feeding materials. Therefore, in order to prevent the impact of the material from stopping the movement of the large chain plate to the beginning of the upward movement of the small chain plate, the sides of the large chain plate and the small chain plate should be designed as grooves with the same diameter as the circular arc of the round bar. Its structure is shown in Figure 4.

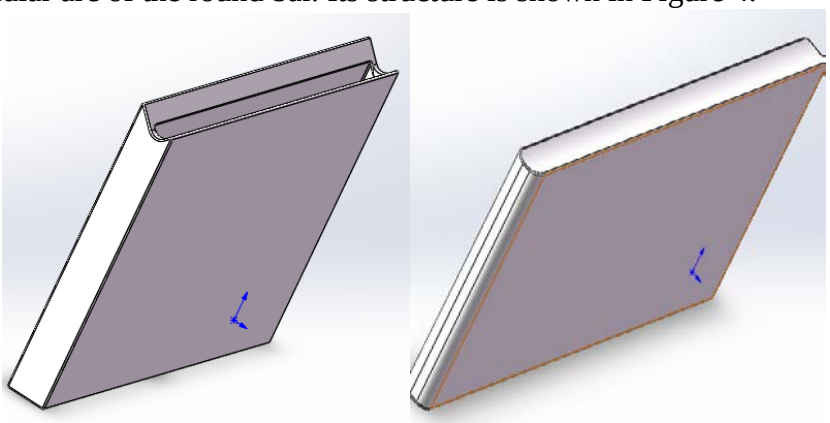

Fig.4 Ree-Dimensional Model of the Large Chain Plate Figure4.Three-Dimensional Model of the Small Chain Plate

3.2 Cylinder Mechanism of Large Chain Plate and Small Chain Plate

The material used for the large chain plate and the small chain plate is ordinary carbon steel. If the large chain plate is designed, the maximum number of materials that can be accommodated is 9 pieces. The mass of a bar is 0.175kg. The total gravity of the bar is

$$G_1 = Z_1 mg = 9 \times 0.175 \times 9.8 = 15.435N \quad (1)$$

The minimum thrust required by the cylinder to push the large chain plate is

$$F_{min} = G_1 + m_1 g + m_2 g = 15.435 + 6.735 \times 9.8 + 3.063 \times 9.8 = 111.455N \quad (2)$$

If there is a large number of bars in the hopper, considering that the large chain plate will be pressured by a large amount of material, the gravity that the large chain plate bears at this time is

$$F_{max} = F_{min} + 7 \times 9 \times mg = 111.455 + 7 \times 9 \times 0.175 \times 9.8 = 219.5N \quad (3)$$

The pre-selected cylinder is the LG series cylinder, and the primary selected cylinder diameter is 32mm, then the required pressure is as follows

$$P_1 = \frac{F_{max}}{\pi {r_1}^2} = \frac{219.5}{\pi \times (16\times10^{-3})^2} = 0.273MPa \quad (4)$$

Therefore, you can choose the cylinder according to the LG series cylinder standard.The thrust required for the small chain plate is

$$F_x = F_{min} - m_1 g = 111.455 - 6.739 \times 9.8 = 45.41\text{N} \quad (5)$$

The initial selection of cylinder is QCJ2 series cylinder, the initial selection of cylinder diameter is 10mm, the number of cylinders is 2, and the required pressure is as follows

$$P_2 = \frac{F_x}{2\pi {r_2}^2} = \frac{45.41}{2\times\pi\times(5\times10^{-3})^2} = 0.29MPa \quad (6)$$

This selects the cylinder name as QCJ2B10-60-0.

4. . Feeding Mechanism

The feeding mechanism is mainly composed of a base, a hopper, a profile support, and a feeding cylinder. The hopper is loaded with scattered blank materials. It is designed with a large opening at the upper end to facilitate the insertion of the blanks. The lower port uses a gradually contracting tilt method, which can make the materials automatically move to the bottom of the hopper under the action of gravity, so that the materials can smoothly fall into the large chain On the upper groove of the board.

The hopper adopts a rectangular parallelepiped structure with a quadrangular prism underneath, and the rectangular parallelepiped has a cross-sectional length of 660mm and a height of 150mm. The bottom surface of the lower quadrangular table is 300mm long and 28mm wide. The volume of the hopper is calculated as follows

$$V_1 = \frac{H_1\sqrt{s_1+s_2+\sqrt{s_1 s_2}}}{3} = \frac{0.1\times\sqrt{0.49+0.0084+\sqrt{0.49\times0.0084}}}{3} = 0.025m^3 \quad (7)$$

$$V_2 = SH_2 = 0.14 \times 0.49 = 0.0686m^3 \quad (8)$$

$$V_3 = V_1 + V_2 = 0.025 + 0.0686 = 0.0936\text{m}^3 \quad (9)$$

The volume of a billet is, this hopper can hold about 4680 billets.

As shown in Figure 5, the feeding trough is designed with 5 metal rods at one end close to the small chain plate. Its main function is to ensure the small seams between the feeding trough and the small chain plate and the high reliability of the mechanism. The 4 metal rods at the upper end of the feeding trough are used to support the material, and the lower end 1 metal rod is used to support the material. To handle the irregularities of the bar material, re-introduct it into the hopper. If there is a bar that is directly hung on the large plate chain without falling, the upward movement of the small chain plate will cause the small chain plate, the bar material and the feeding trough to jam. The metal bar at the lower end of the feeding trough is located at the center of the large chain plate. When there is unsatisfied material rising with the large chain plate to the first limit, the material will contact the metal bar, and under the action of the eccentric force, the bar will be moved from the small chain. The board falls into the hopper, thereby effectively preventing jamming.

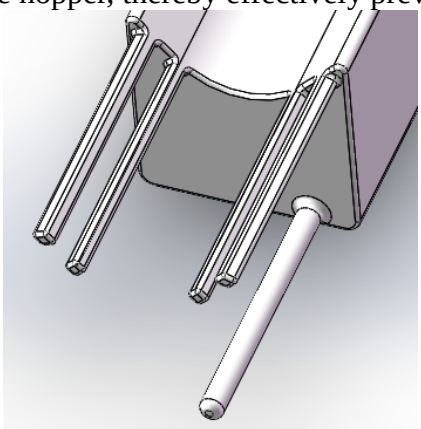

Fig.5 Schematic Diagram of the Structure of the Feeding Trough

5. Analysis of Two Fixed Plates

The support plate and the four pillars are tightly connected by right-angle brackets and screws. The reaction force, gravity, and the gravity of the support plate that the large chain plate cylinder undergoes in the process of separating materials are all borne by the two support plates, and these forces will cause the support plate to deform. In view of the deformation of the two supporting plates, the supporting plate of suitable material was selected through finite element analysis. Since the large chain plate cylinder and the two supporting plates are tightly connected by bolts, and the deformation caused by the force during the separation and feeding is small, the influence of the deformation on the connecting mechanism is omitted here. Using SolidWorks to perform mechanical stress analysis on the two support plates can obtain the results shown in Figure 6 below.

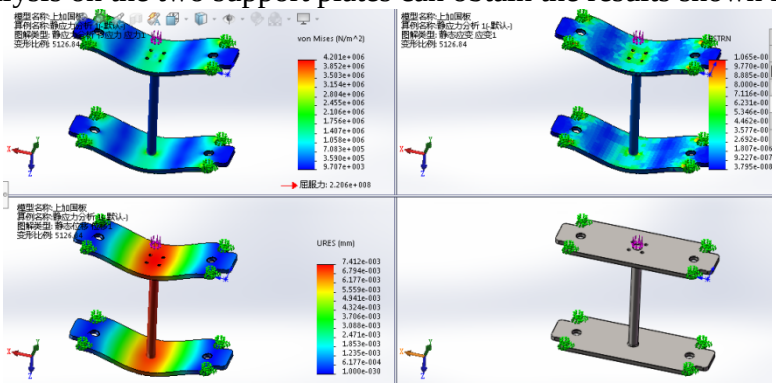

Fig.6 Comparison of -10mm Finite Element Analysis Results of Ordinary Carbon Steel

Table 1 Statistics of The Maximum Deformation of Various Materials with Different Thicknesses

Selected material and thickness (mm)	Maximum deformation (mm)
Ordinary carbon steel-1mm	5.7
Ordinary carbon steel -3mm	2.2
Ordinary carbon steel-4mm	0.098
Ordinary carbon steel-5mm	0.05
Ordinary carbon steel-10mm	0.0074
ABS-4mm	9

Through the finite element analysis, the largest deformation variable of the simplified model of the support plate is the largest deformation variable obtained by analyzing the thickness of other materials. The results are shown in the table 1 above for the statistical table of the maximum deformation of various materials with different thicknesses. From the data in the table, it can be concluded that the maximum deformation of the support plate of ordinary carbon steel-4mm is 0.098mm, so the support plate of ordinary carbon steel-4mm is selected.

6. Conclusion

Through the finite element analysis of various cylinders of the chain-plate separation and feeding device of the fully automatic mechanical press, it can be concluded that the device can effectively reduce noise, and separate, distribute, directional lead, store, and feed blank materials. The materials can be arranged in a certain direction. At the same time, the material separated by PLC intelligent control is preheated and processed at a certain speed, which makes the device highly reliable and improves the working efficiency of processing nuts.

References

[1] Zhu Lisong. Research on electric upsetting machine and automatic feeding control system [D]. Wuhan: Huazhong University of Science and Technology, 2004.

[2] Zeng Zhi. Introduction to the process of cold forging nuts at home and abroad[J]. Forging Machinery. 1970(04): 31-33.

[3] Shi Luhui. Design and implementation of integrated automation monitoring system based on PLC and WinCC [D]. South China University of Technology, 2016.

[4] Chen Zhiqiang. Research and development of automatic loading and unloading device for hot forging production line of automobile bearing ring [D]. Zhejiang University of Technology, 2020.

[5] Liu Yuncheng. Basic research on the assembly line of 20P series electric valve parts [D]. Hebei University of Technology, 2015.